GP160H(QHKR)	E-11 RECOIL STARTER (1)

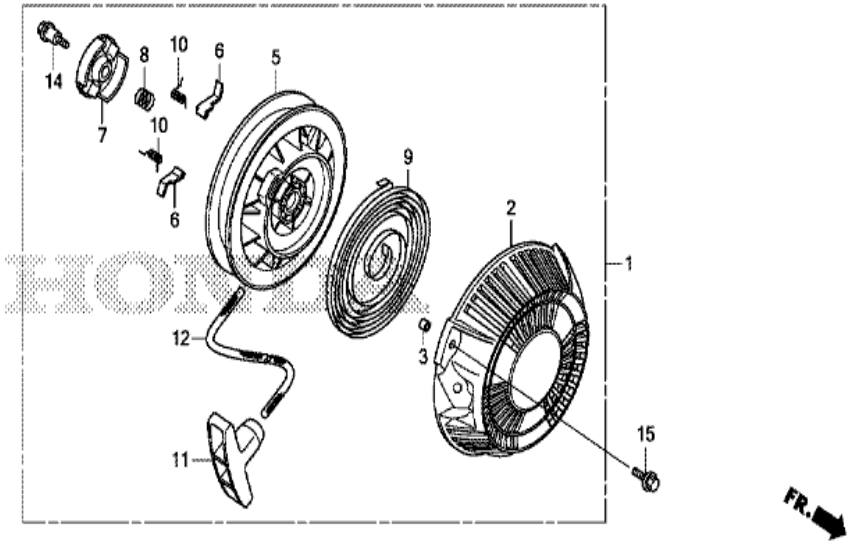

ZDK0E1100A

Ref	Partnumber	Description	GP160H	Serial Numbers
001	28400-ZDK-003	STARTER ASSY., RECOIL	1	
002	28414-ZDK-003	CASE, RECOIL STARTER	1	
003	28415-ZDK-003	COLLAR, RECOIL STARTER	3	
005	28421-ZDK-003	REEL, RECOIL STARTER	1	
006	28422-ZDK-003	RATCHET, STARTER	2	
007	28433-ZDK-003	GUIDE, RATCHET	1	
008	28441-ZDK-003	SPRING, FRICTION	1	
009	28442-ZDK-003	SPRING, RECOIL STARTER	1	
010	28443-ZDK-003	SPRING, RETURN	2	
011	28461-ZDK-003	KNOB, RECOIL STARTER	1	
012	28462-ZDK-003	ROPE, RECOIL STARTER	1	
014	90003-ZDK-003	SCREW, SETTING	1	
015	95701-0601600	BOLT, FLANGE, 6X16	3	

GP160H(QHKR)	E-12 FAN COVER

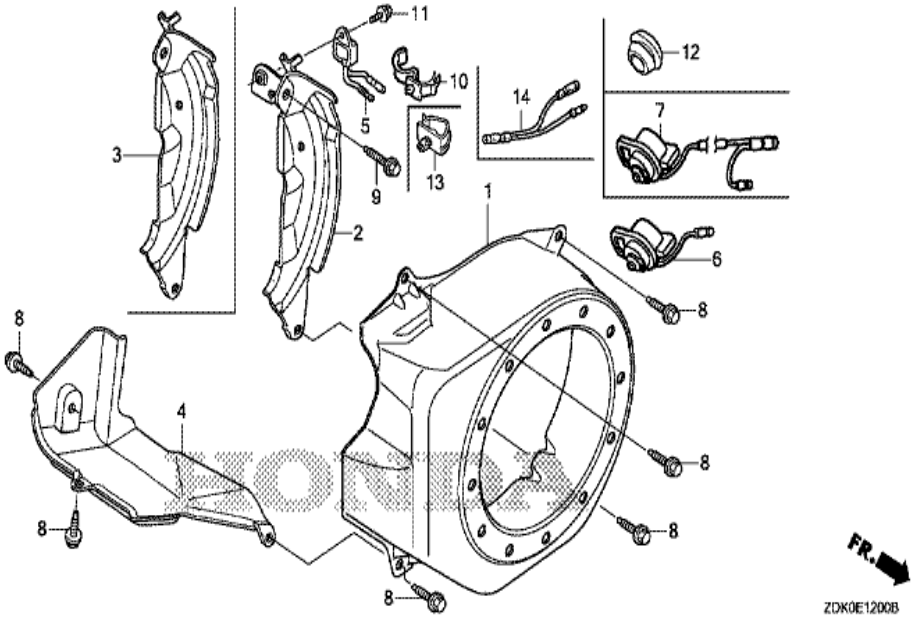

Ref	Partnumber	Description	GP160H	Serial Numbers
001	19610-ZDK-000ZA	COVER COMP., FAN *NH31*	1	
003	19612-ZH8-000	PLATE, SIDE (STD.)	1	
004	19631-ZDK-000	SHROUD	1	
008	90013-883-000	BOLT, FLANGE, 6X12 (CT200)	6	
009	90022-888-010	BOLT, FLANGE, 6X20 (CT200)	1	
012	81329-567-020	GROMMET, DRAIN HOLE	1	

GP160H(QHKR)	E-14 CARBURETOR (1)

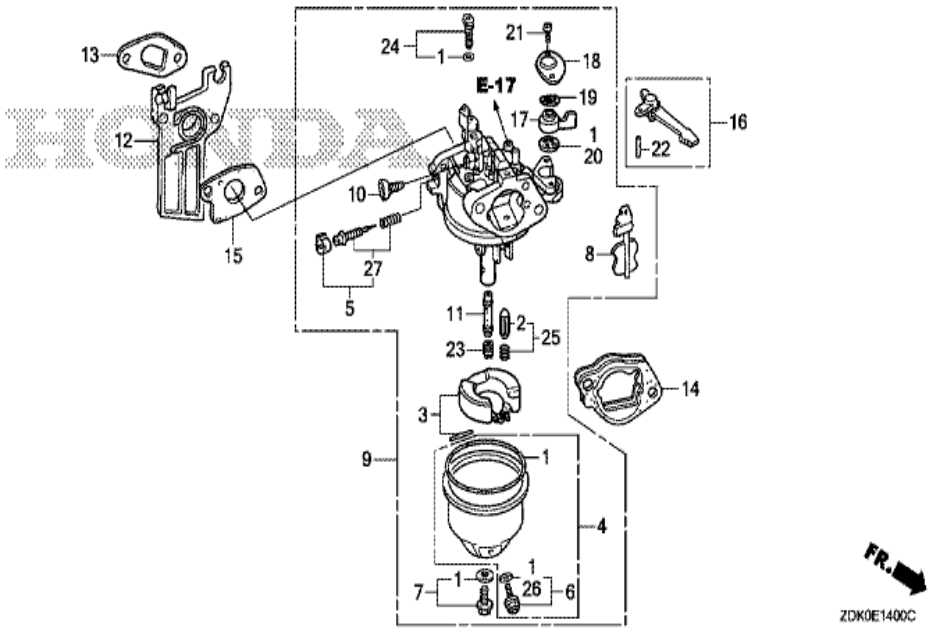

Ref	Partnumber	Description	GP160H	Serial Numbers	
001	16010-ZE0-025	GASKET SET	1		
002	16011-Z1T-711	VALVE SET, FLOAT	1		
003	16013-Z1T-711	FLOAT SET	1		
004	16015-ZE0-831	CHAMBER SET, FLOAT	1		
005	16016-ZDK-003	SCREW SET, PILOT	1		
005	16016-ZDK-003	SCREW SET, PILOT	1	BEA2F B	
005	16016-ZH7-W01	SCREW SET, PILOT	1		
005	16016-ZH7-W01	SCREW SET, PILOT	1		
005	16016-ZH7-W01	SCREW SET, PILOT	1		BEA2F A
006	16024-ZE1-811	SCREW SET, DRAIN	1		
007	16028-ZDK-003	SCREW SET	1		
007	16028-ZDK-003	SCREW SET	1	BEA2F B	
007	16028-ZE0-005	SCREW SET	1		
Ref	Partnumber	Description	GP160H	Serial Numbers	
007	16028-ZE0-005	SCREW SET	1		
007	16028-ZE0-005	SCREW SET	1		BEA2F A

008	16044-ZE0-005	CHOKE SET	1		
009	16100-ZDK-003	CARBURETOR ASSY. (BEA2F A/B/C)	1		
010	16124-ZE0-005	SCREW, THROTTLE STOP	1		
011	16166-ZDK-003	NOZZLE, MAIN	1		
011	16166-ZDK-003	NOZZLE, MAIN	1	BEA2F B	
011	16166-ZH8-W50	NOZZLE, MAIN	1		
011	16166-ZH8-W50	NOZZLE, MAIN	1		BEA2F A
011	16166-ZH8-W50	NOZZLE, MAIN	1		BEA2F A
011	16166-ZH8-W50	NOZZLE, MAIN	1		BEA2F A
012	16211-Z1T-000	INSULATOR, CARBURETOR (JLH)	1		
013	16212-Z1T-701	PACKING, INSULATOR (NINGBO SIL GASKET)	1		
013	16212-ZH8-800	PACKING, INSULATOR	(1)		
014	16220-ZE1-020	SPACER COMP., CARBURETOR	1		
015	16221-Z1T-701	PACKING, CARBURETOR (NINGBO SIL GASKET)	1		
015	16221-ZH8-801	PACKING, CARBURETOR	(1)		
016	16610-Z1T-000	LEVER COMP., CHOKE (STD.)	1		
017	16953-ZDK-003	LEVER, COCK	1		
017	16953-ZDK-003	LEVER, COCK	1	BEA2F B	
017	16953-ZE1-812	LEVER, COCK	1		
017	16953-ZE1-812	LEVER, COCK	1		
017	16953-ZE1-812	LEVER, COCK	1		BEA2F A
018	16954-ZE1-812	PLATE, LEVER SETTING	1		
019	16956-ZE1-811	SPRING, COCK LEVER	1		
020	16957-ZE1-812	PACKING, FUEL COCK	1		
021	93500-030061H	SCREW, PAN, 3X6	2		
022	94305-20122	PIN, SPRING, 2X12	1		
023	99101-ZDK0680	JET, MAIN, #68	(1)		
023	99101-ZDK0680	JET, MAIN, #68	(1)	BEA2F B	
023	99101-ZDK0700	JET, MAIN, #70	(1)	BEA2F B	
023	99101-ZDK0700	JET, MAIN, #70	(1)	BEA2F B	
023	99101-ZDK0720	JET, MAIN, #72	1	BEA2F B	
Ref	Partnumber	Description	GP160H	Serial Numbers	
023	99101-ZDK0720	JET, MAIN, #72	1	BEA2F B	
023	99101-ZH80680	JET, MAIN, #68	(1)		
023	99101-ZH80680	JET, MAIN, #68	(1)		BEA2F A
023	99101-ZH80680	JET, MAIN, #68	(1)		BEA2F A
023	99101-ZH80700	JET, MAIN, #70	(1)		
023	99101-ZH80700	JET, MAIN, #70	(1)		BEA2F A
023	99101-ZH80700	JET, MAIN, #70	(1)		BEA2F A

023	99101-ZH80720	JET, MAIN, #72	1	
023	99101-ZH80720	JET, MAIN, #72	1	BEA2F A
023	99101-ZH80720	JET, MAIN, #72	1	BEA2F A
024	99204-ZE00350	JET SET, PILOT, #35	1	
026	16141-Z0S-003	WASHER, PLAIN (6.2X10.7 DRAIN)	1	

GP160H(QHKR)	E-15 AIR CLEANER (DUAL)

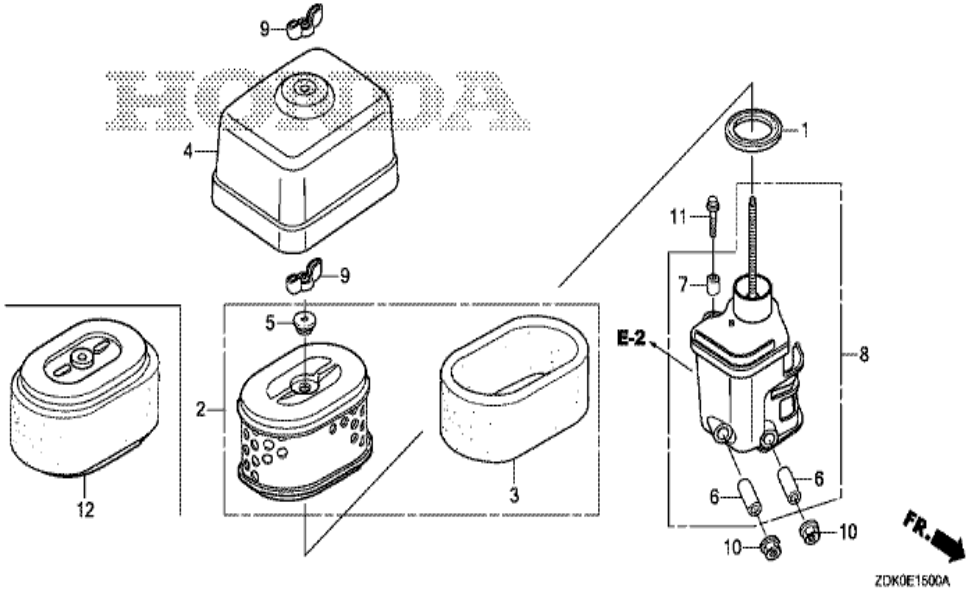

Ref	Partnumber	Description	GP160H	Serial Numbers
001	16271-ZE1-000	PACKING, ELBOW	1	
002	17210-ZE1-822	ELEMENT, AIR CLEANER (DUAL)	1	
003	17218-ZE1-821	FILTER, OUTER	1	
004	17231-ZDK-820	COVER, AIR CLEANER	1	
005	17232-891-000	GROMMET, AIR CLEANER	1	
006	17238-ZE7-010	COLLAR, AIR CLEANER	2	
007	17239-ZE1-000	COLLAR B, AIR CLEANER	1	
008	17410-ZDK-000	ELBOW COMP., AIR CLEANER	1	
009	90325-044-000	NUT, TOOL BOX SETTING	2	
010	94050-06000	NUT, FLANGE, 6MM	2	
011	95701-0602000	BOLT, FLANGE, 6X20	1	

GP160H(QHKR)	E-16 MUFFLER

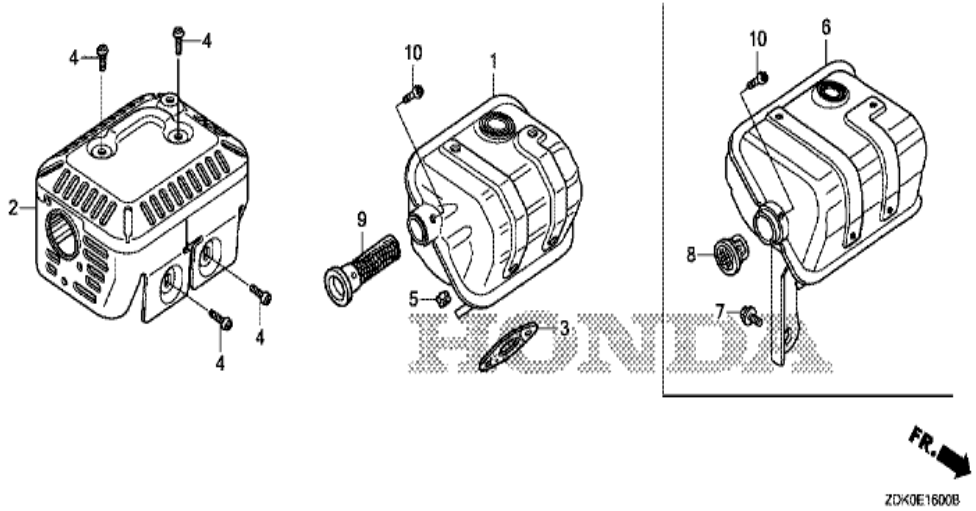

Ref	Partnumber	Description	GP160H	Serial Numbers
001	18310-ZDK-000	MUFFLER COMP.	1	
002	18320-ZDK-000	PROTECTOR COMP., MUFFLER	1	
003	18381-Z1T-003	GASKET, MUFFLER	(1)	
003	18381-Z1T-701	GASKET, MUFFLER (NINGBO SIL GASKET)	1	
004	90050-ZE1-000	SCREW, TAPPING, 5X8	4	
005	94001-080000S	NUT, HEX., 8MM	2	
009	18545-ZDK-690	SCREEN COMP.	1	
010	90056-ZL0-000	SCREW, TAPPING, 4X6	1	

GP160H(QHKR)	E-17 FUEL TANK

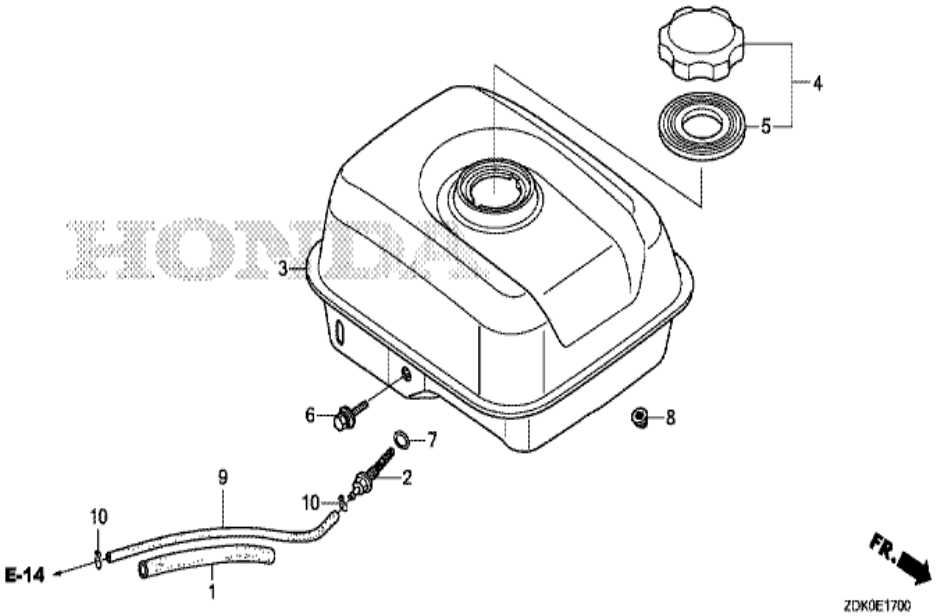

Ref	Partnumber	Description	GP160H	Serial Numbers
001	16854-ZH8-000	RUBBER, SUPPORTER (107MM)	1	
002	16955-Z1T-010	JOINT, FUEL TANK	1	
003	17510-ZDK-000ZA	TANK COMP., FUEL *NH31*	1	
004	17620-Z1T-800	CAP COMP., FUEL FILLER (CHROME PLATED) (	1	
005	17631-Z1T-800	PACKING, FUEL FILLER CAP (39X62X3) (TOUY	1	
006	90004-Z1T-000	BOLT, FLANGE, 6X29	1	
007	91353-671-004	O-RING, 14MM (NOK)	1	
008	94050-06000	NUT, FLANGE, 6MM	2	
009	95001-4514040	TUBE, FUEL, 4.5X140 (95001-45001-60M)	1	
010	95002-02080	CLIP, TUBE (B8)	2	

GP160H(QHKR)	E-19 FLYWHEEL

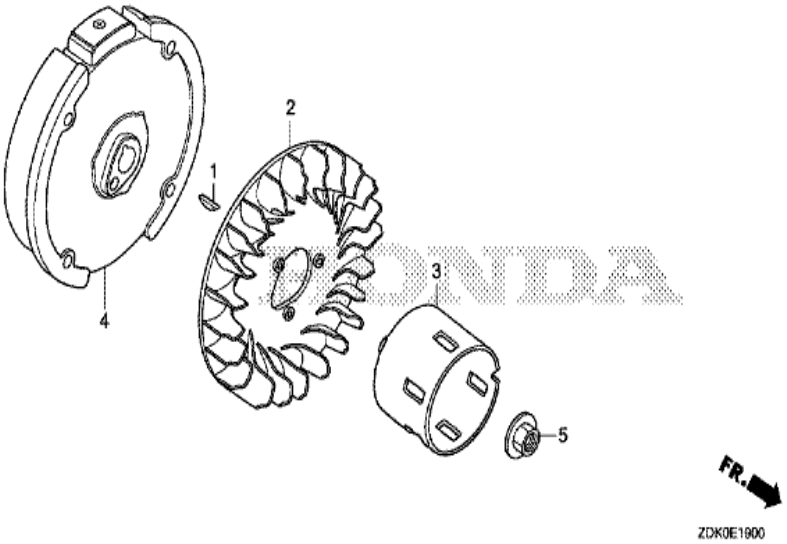

Ref	Partnumber	Description	GP160H	Serial Numbers
001	13331-357-000	KEY, SPECIAL WOODRUFF, 25X18	1	
002	19511-Z1T-000	FAN, COOLING	1	
003	28451-ZDK-003	PULLEY, STARTER	1	
004	31110-Z1T-004	FLYWHEEL COMP. (YUXIN)	1	
005	90201-Z1T-000	NUT, SPECIAL, 14MM	1	

GP160H(QHKR)	E-2 CYLINDER HEAD

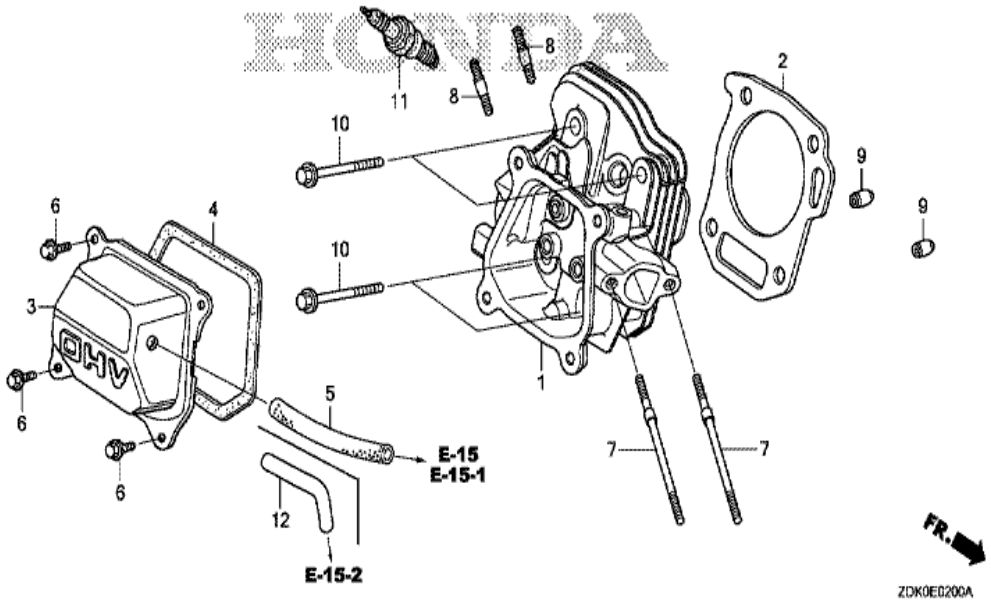

Ref	Partnumber	Description	GP160H	Serial Numbers
001	12210-Z1T-405	HEAD COMP., CYLINDER	1	
002	12251-ZL0-003	GASKET, CYLINDER HEAD (NIPPON LEAKLESS)	1	
003	12310-ZE1-020	COVER COMP., HEAD	1	
004	12312-Z1T-701	PACKING, HEAD COVER (NINGBO SIL GASKET)	1	
004	12391-ZE1-000	PACKING, HEAD COVER	(1)	
005	15721-ZH8-000	TUBE, BREATHER	1	
006	90013-883-000	BOLT, FLANGE, 6X12 (CT200)	4	
007	90043-ZDK-000	BOLT, STUD, 6X112	2	
008	90047-ZDK-000	BOLT, STUD, 8X32	2	
009	94301-10160	DOWEL PIN, 10X16	2	
010	95701-0806000	BOLT, FLANGE, 8X60	4	
011	98079-56846	PLUG, SPARK (BPR6ES) (NGK)	1	
011	98079-56855	PLUG, SPARK (W20EPR-U) (DENSO)	1	

GP160H(QHKR)	E-20 IGNITION COIL

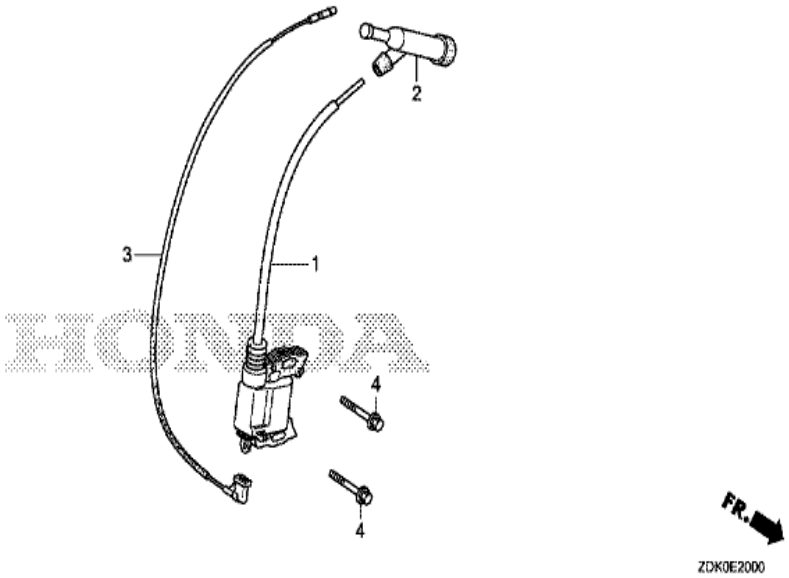

Ref	Partnumber	Description	GP160H	Serial Numbers
001	30500-ZDK-004	COIL ASSY., IGNITION	1	
002	30700-ZDK-004	CAP ASSY., NOISE SUPPRESSOR	1	
003	32195-ZDK-004	CORD, STOP SWITCH	1	
004	90121-952-000	BOLT, FLANGE, 6X25 (CT200)	2	

GP160H(QHKR)	E-22 CONTROL

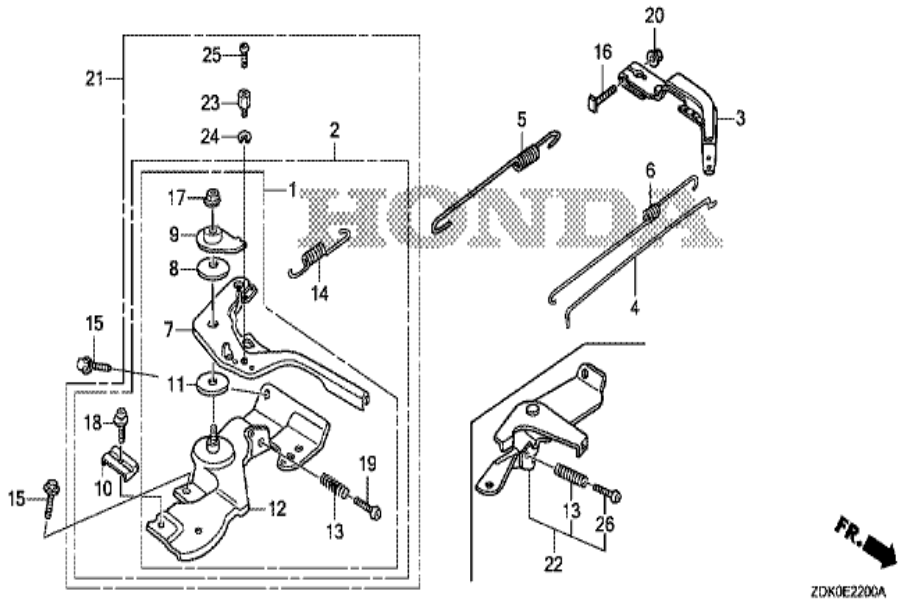

Ref	Partnumber	Description	GP160H	Serial Numbers
003	16551-ZE0-010	ARM, GOVERNOR	1	
004	16555-ZE1-000	ROD, GOVERNOR	1	
005	16561-ZDK-000	SPRING, GOVERNOR	1	
006	16562-ZE1-020	SPRING, THROTTLE RETURN	1	
007	16571-Z1T-000	LEVER, CONTROL	1	
008	16574-ZE1-000	SPRING, LEVER	1	
009	16575-ZH8-000	WASHER, CONTROL LEVER	1	
010	16576-891-000	HOLDER, CABLE	1	
011	16578-ZE1-000	SPACER, CONTROL LEVER	1	
012	16580-ZH8-813	BASE COMP., CONTROL (REMOTE)	1	
013	16584-883-300	SPRING, CONTROL ADJUSTING	1	
014	16592-ZE1-810	SPRING, CABLE RETURN	1	
015	90013-883-000	BOLT, FLANGE, 6X12 (CT200)	2	
Ref	Partnumber	Description	GP160H	Serial Numbers
016	90015-ZE5-010	BOLT, GOVERNOR ARM	1	
017	90114-SA0-000	NUT, SELF-LOCK, 6MM	1	

017	90202-Z1T-000	NUT, SELF-LOCK, 6MM	1
018	93500-050160A	SCREW, PAN, 5X16	1
019	93500-050250H	SCREW, PAN, 5X25	1
020	94050-06000	NUT, FLANGE, 6MM	1
021	16500-Z1T-610	CONTROL ASSY. (REMOTE/INTERNAL)	1
023	16594-883-010	HOLDER, WIRE	1
024	90605-Z1T-000	CIRCLIP, 5MM	1
025	93500-040060H	SCREW, PAN, 4X6	1

GP160H(QHKR)	E-28 LABEL

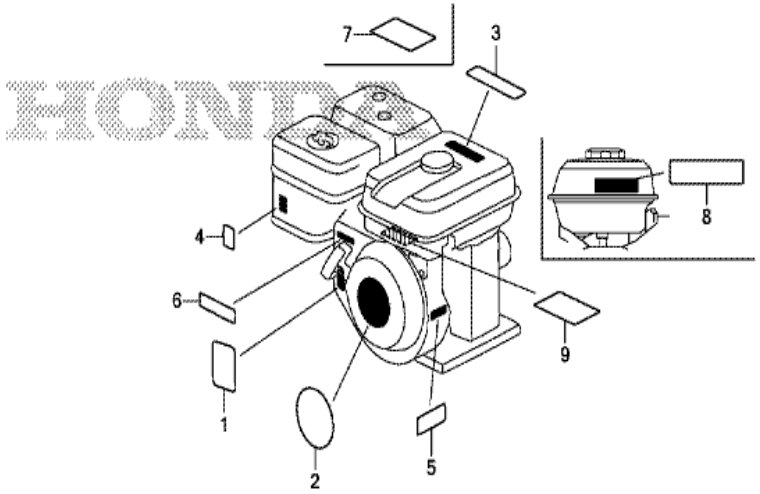

ZDK0E2800B

Ref	Partnumber	Description	GP160H	Serial Numbers
001	87114-ZH7-000	LABEL, WARNING (NOT CERTIFIED FOR SALE)	1	
001	87114-ZH7-850	LABEL, WARNING	1	
002	87521-ZDK-000	EMBLEM (GP160)	1	
004	87528-ZH7-000	MARK, CHOKE (GRAY)	1	
007	87519-Z4N-000	MARK, OPERATOR CAUTION (PICTOGRAPH)	1	

GP160H(QHKR)	E-3 CYLINDER BARREL

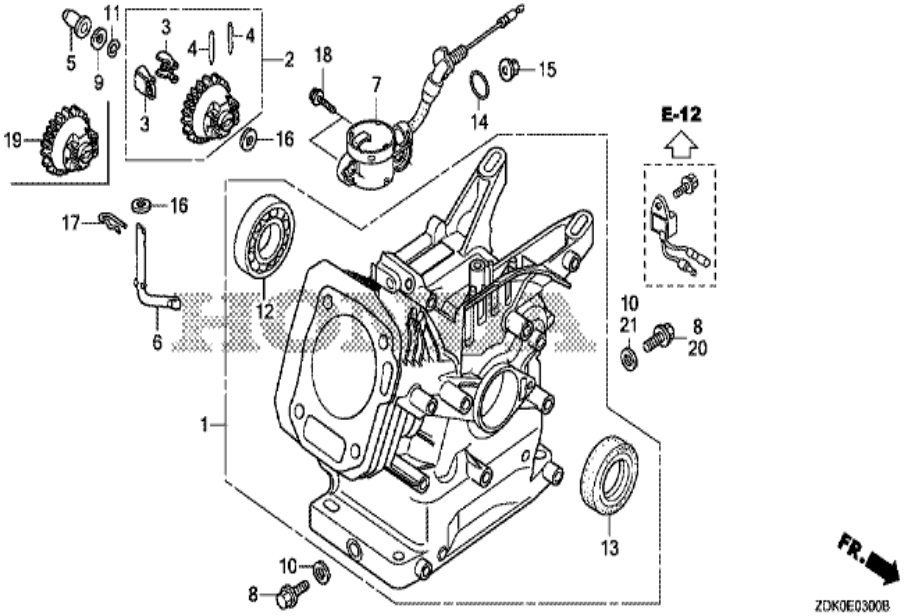

Ref	Partnumber	Description	GP160H	Serial Numbers
001	12000-ZDK-405	BARREL ASSY., CYLINDER	1	
002	16510-Z1T-000	GOVERNOR ASSY.	1	
003	16511-ZE1-000	WEIGHT, GOVERNOR	2	
004	16513-ZE1-000	PIN, GOVERNOR WEIGHT	2	
005	16531-Z1T-000	SLIDER, GOVERNOR	1	
006	16541-Z1T-000	SHAFT, GOVERNOR ARM	1	
008	90131-ZE1-000	BOLT, DRAIN PLUG	2	
009	90451-Z1T-000	WASHER, THRUST, 6MM	1	
010	90601-ZE1-000	WASHER, DRAIN PLUG, 10.2MM	2	
011	90602-ZE1-000	CLIP, GOVERNOR HOLDER	1	
012	91001-Z1T-003	BEARING, RADIAL BALL, 6205 (NSK)	1	
012	91001-ZF1-003	BEARING, RADIAL BALL (6205TMB) (NTN)	1	
012	91001-ZF1-004	BEARING, RADIAL BALL (6205SH) (KOYO)	1	
Ref	Partnumber	Description	GP160H	Serial Numbers
013	91202-Z1T-003	OIL SEAL, 25X41X6	1	
016	94101-06800	WASHER, PLAIN, 6MM	2	

017	94251-08000	PIN, LOCK, 8MM	1

GP160H(QHKR)	E-40 OTHER PARTS

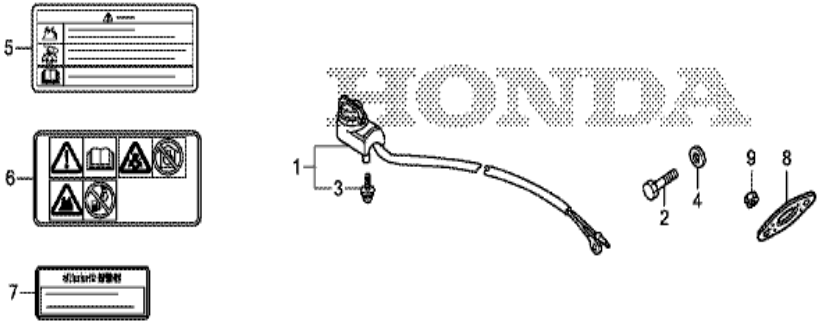

ZDK0E4000B

Ref	Partnumber	Description	GP160H	Serial Numbers
002	90003-ZE1-000	BOLT, HEX., 5/16"	1	
004	90473-842-000	WASHER, 8MM	1	

GP160H(QHKR)	E-6 CRANKCASE COVER

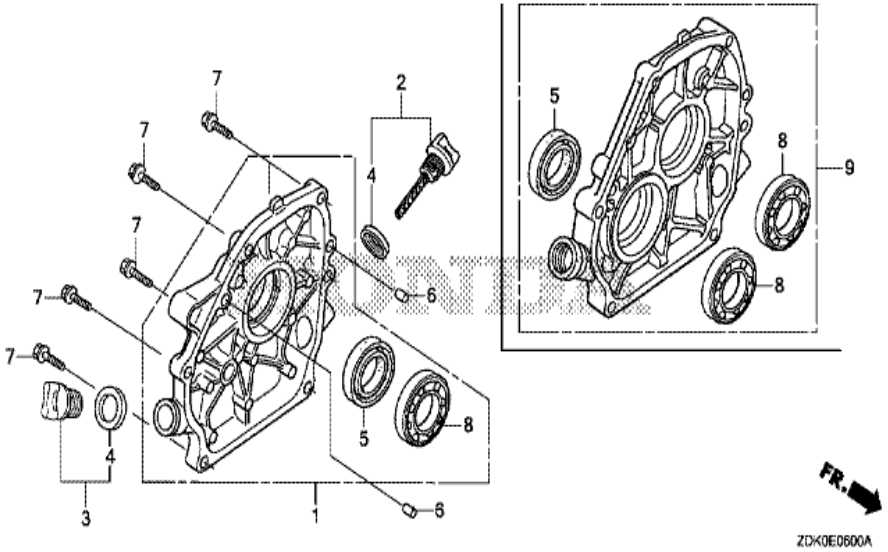

Ref	Partnumber	Description	GP160H	Serial Numbers
001	11300-ZDK-640	COVER ASSY., CRANKCASE	1	
002	15600-Z1T-000	CAP ASSY., OIL FILLER	1	
003	15600-Z1T-600	CAP ASSY., OIL FILLER	1	
004	15625-Z1T-000	PACKING, OIL FILLER CAP	1	
004	15625-Z1T-000	PACKING, OIL FILLER CAP	2	
005	91202-Z1T-003	OIL SEAL, 25X41X6	1	
006	94301-08140	DOWEL PIN, 8X14	2	
007	95701-0803200	BOLT, FLANGE, 8X32	6	
008	96100-6205000	BEARING, RADIAL BALL, 6205	1	

GP160H(QHKR)	E-7 CRANKSHAFT

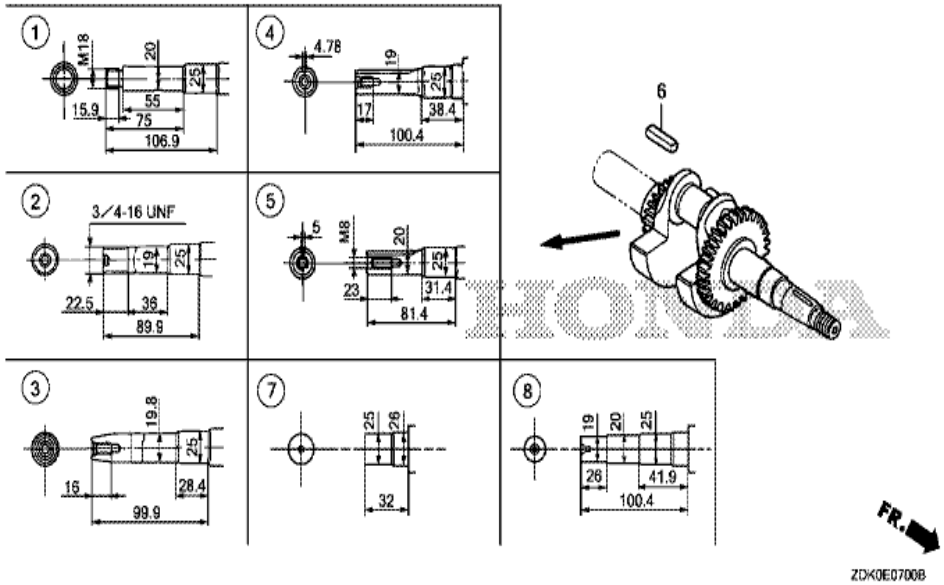

Ref	Partnumber	Description	GP160H	Serial Numbers
004	13310-Z1T-800	CRANKSHAFT COMP.	1	
006	90745-ZE1-600	KEY, 4.78X4.78X38	1	

GP160H(QHKR)	E-8 PISTON

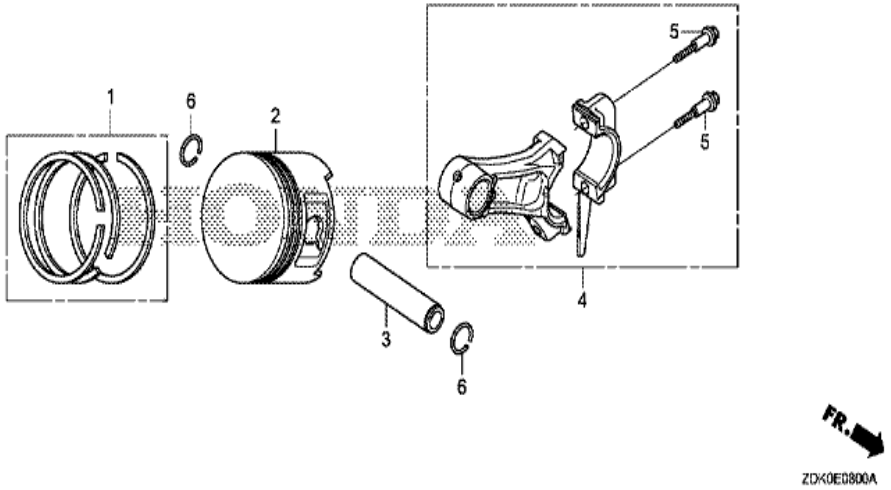

Ref	Partnumber	Description	GP160H	Serial Numbers
001	13010-Z4K-004	RING SET, PISTON (STD.) (TPR)	1	
001	13010-Z4P-003	RING SET, PISTON (STD.) (RIKEN)	1	
001	13011-Z4K-004	RING SET, PISTON (0.25) (TPR)	(1)	
001	13011-Z4P-003	RING SET, PISTON (0.25) (RIKEN)	(1)	
001	13012-Z4K-004	RING SET, PISTON (0.50) (TPR)	(1)	
001	13012-Z4P-003	RING SET, PISTON (0.50) (RIKEN)	(1)	
001	13013-Z4K-004	RING SET, PISTON (0.75) (TPR)	(1)	
001	13013-Z4P-003	RING SET, PISTON (0.75) (RIKEN)	(1)	
002	13101-Z1T-010	PISTON (STD.) (JIALING-HONDA)	1	
002	13102-Z1T-000	PISTON (0.25)	(1)	
002	13103-Z1T-000	PISTON (0.50)	(1)	
002	13104-Z1T-000	PISTON (0.75)	(1)	
003	13111-Z1T-000	PIN, PISTON	1	
Ref	Partnumber	Description	GP160H	Serial Numbers
004	13200-Z1T-600	ROD ASSY., CONNECTING (JLH)	1	
005	90001-Z1T-000	BOLT, CONNECTING ROD	2	

006	90551-ZE1-000	CLIP, PISTON PIN, 18MM	2

GP160H(QHKR)	E-9 CAMSHAFT

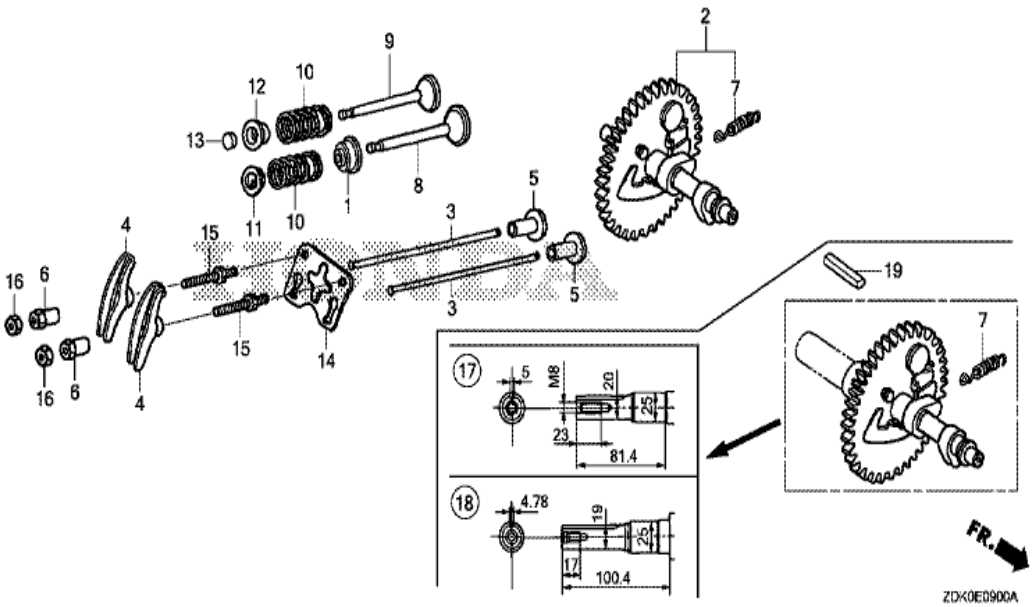

Ref	Partnumber	Description	GP160H	Serial Numbers
001	12209-ZH8-003	SEAL, VALVE STEM	1	
002	14100-Z1T-810	CAMSHAFT ASSY. (JLH)	1	
003	14410-ZE1-010	ROD, PUSH	2	
004	14431-ZE1-000	ARM, VALVE ROCKER	2	
005	14441-ZE1-010	LIFTER, VALVE	2	
006	14451-Z7E-000	PIVOT, ROCKER ARM	2	
007	14568-ZE1-000	SPRING, WEIGHT RETURN	1	
008	14711-ZF1-000	VALVE, IN.	1	
009	14721-ZF1-000	VALVE, EX.	1	
010	14751-ZF1-000	SPRING, VALVE	2	
011	14771-ZE1-000	RETAINER, IN. VALVE SPRING	1	
012	14773-ZE1-000	RETAINER, EX. VALVE SPRING	1	
013	14781-ZE1-000	ROTATOR, VALVE	1	
Ref	Partnumber	Description	GP160H	Serial Numbers
014	14791-ZE1-010	PLATE, PUSH ROD GUIDE	1	
015	90012-ZE0-010	BOLT, PIVOT, 8MM	2	

016	90206-ZE1-000	NUT, PIVOT ADJUSTING	2

GP160H(QHKR)	EOP-1 GASKET KIT

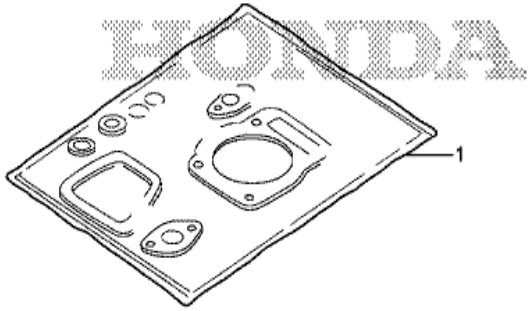

ZDK0X0100

Ref	Partnumber	Description	GP160H	Serial Numbers
001	06111-ZDK-000	GASKET KIT	(1)	