2015/11/02

1 CRANKCASE

FIG. 101

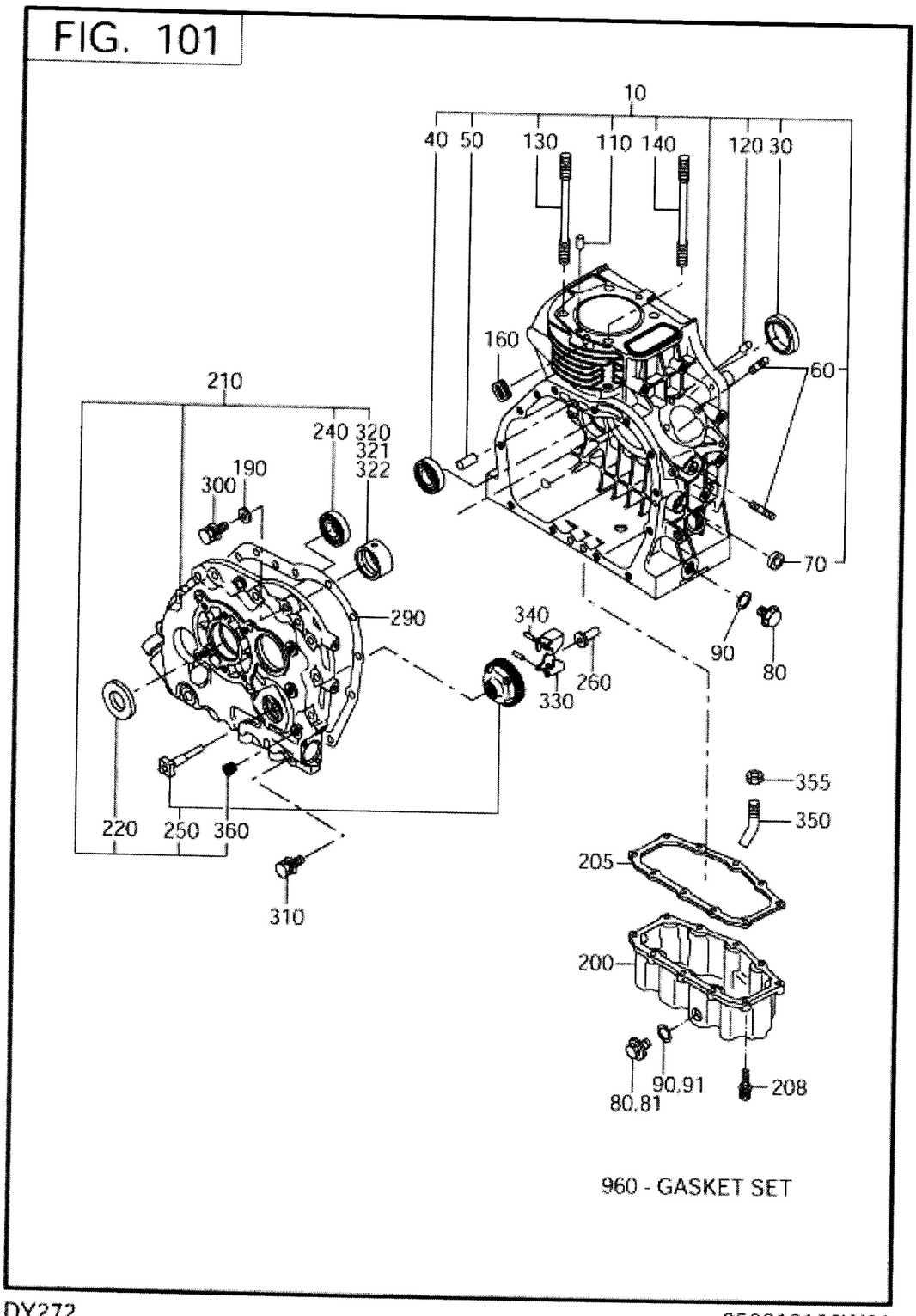

DY272DD7060 FIG.101

REF.	PART NUMBER	PART NAME	CODE NO.	QTY	REMARKS	INTERCHANGE
10	244-10101-81	CRANKCASE CP	-	1		
30	044-03000-61	OIL SEAL	-	1		
40	060-01700-40	BALL BEARING	-	1	17DX35DX10B	
50	031-00801-10	DOWEL PIN	-	2		
60	001-37062-21	STUD	-	3		
70	044-00800-30	OIL SEAL	-	1	8DX18DX7B	
80	040-11400-30	OIL DRAIN PLUG	-	2		
90	021-11400-20	GASKET 14	-	2		
110	031-00600-10	DOWEL PIN	-	2	6DX14.8L	
120	031-00500-40	DOWEL PIN	-	1		
130	244-16001-21	TENSION BOLT	-	3		244-16002-21
140	244-16002-21	TENSION BOLT	-	1		
160	243-75001-03	GROMMET	-	1		
210	256-11012-01	MAINBEARING COVER CP	-	1		
220	044-03000-31	OILSEAL	-	1	30DX45DX8B	
240	060-01700-40	BALL BEARING	-	1	17DX35DX10B	
250	243-45011-17	GOVERNOR GEAR SET	-	1		
260	205-41901-03	GOVERNOR SLEEVE	-	1	6DX9DX16DX26L	
290	255-15004-03	GASKET(BEARING COVER	-	1	T=0.5	
300	011-00803-10	FLANGE BOLT	10211-	12	M8X1.25X16DX33L	
	011-00802-70	FLANGE BOLT	-10210	12	M8X1.25X16DX33L	011-00803-10
310	011-00802-80	FLANGE BOLT	-	1	M8X1.25X16DX38L	
320	243-15801-03	MAIN BEARING	-	1	STD.	
321	243-15802-03	MAIN BEARING	-	1	0.25 U.S.	
322	243-15803-03	MAIN BEARING	-	1	0.50 U.S.	
330	220-41601-H3	FLYWEIGHT	-	2		
340	030-73000-70	PIN	-	2	2.6DX27.5L	
360	235-15421-03	BLIND PLUG	-	4	PT1/8X8L	
960	256-99001-27	GASKET SET	-	1		

2015/11/02

1 CRANKCASE GROUP

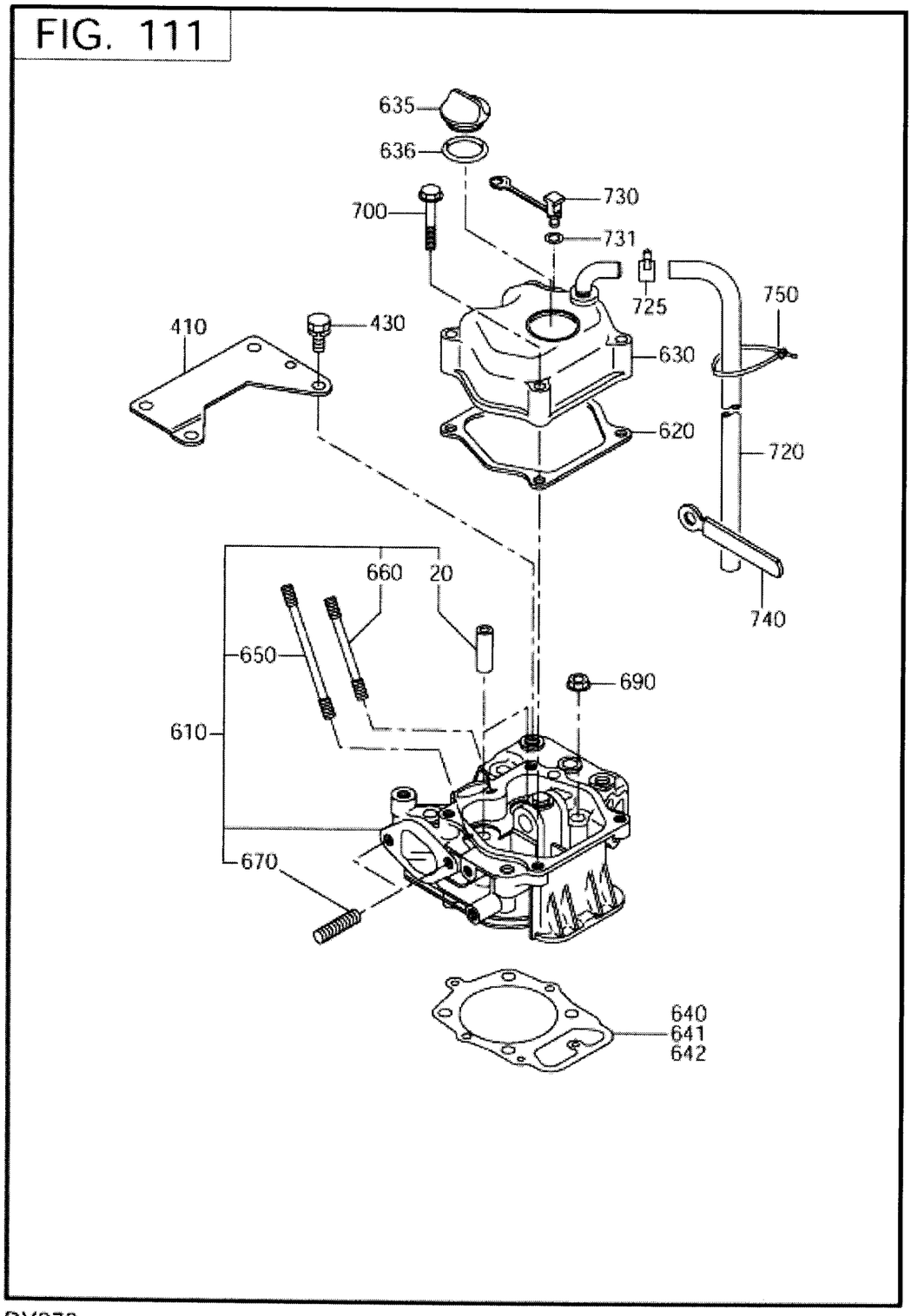

DY272DD7060 FIG.111

REF.	PART NUMBER	PART NAME	CODE NO.	QTY	REMARKS	INTERCHANGE
20	243-14204-13	VALVE GUIDE	-	2	5.5DX9.5DX30L	
610	243-13001-81	CYLINDER HEAD CP	-	1		
620	243-15032-13	GASKET(ROCKER COVER)	-	1	T=2	
630	243-17101-01	ROCKER COVER CP	-	1		
640	256-15001-03	GASKET(HEAD)	-	1	T=0.2	
641	256-15002-03	GASKET(HEAD)	-	1	T=0.25	
642	256-15003-03	GASKET(HEAD)	-	1	T=0.3	
650	001-39066-00	STUD	-	1		
660	010-50601-50	STUD	-	1	M6X1.0X70L	
670	001-37082-01	STUD	-	2		
690	018-00900-10	FLANGE NUT	-	4	M9X1.25X18DX9H	
700	011-00601-70	FLANGE BOLT	-	4	M6X1.0X13DX40L	
730	243-55011-03	PLUG	-	1		

2015/11/02

2 CRANKSHAFT,PISTON

FIG. 201

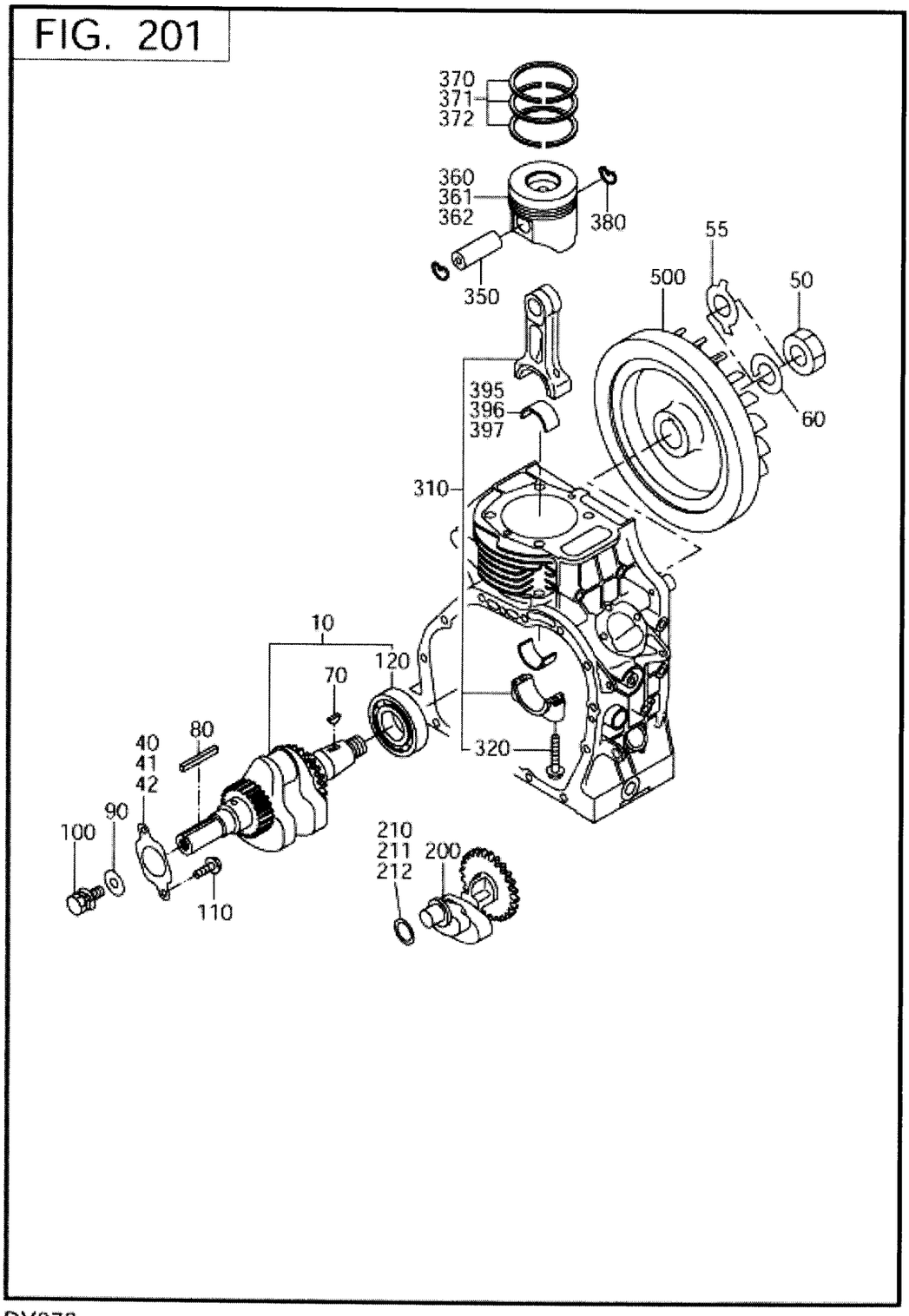

DY272DD7060 FIG.201

REF.	PART NUMBER	PART NAME	CODE NO.	QTY	REMARKS	INTERCHANGE
10	244-20201-21	CRANK SHAFT CP	-	1		
40	243-25001-03	THRUST WASHER	-	1	T=0.8	
41	243-25002-03	THRUST WASHER	-	1	T=1.0	
42	243-25003-03	THRUST WASHER	-	1	T=1.2	
50	002-18180-00	NUT	-	1	M18X1.5X15H	
60	003-20180-00	SPRING WASHER	-	1	18.2DX31DX4.6T	
70	032-30300-10	WOODRUFF KEY	-	1	3BX6HX16D	
80	005-30073-51	KEY	-	1	7BX7HX35L	
90	020-00800-20	WASHER	-	1	8.5DX35DX4.5T	
100	001-13081-60	BOLT AND WASHER AY	-	1	M8X1.25X16L W/SW	
110	011-00600-10	FLANGE BOLT	-	2	M6X1.0X14DX8L	
120	060-03502-00	BALL BEARING	-	1	35DX80DX21B	
200	243-24301-01	BALANCER CP	-	1		
210	023-01700-20	SPACER	-	1	17.5DX24DX0.8T	
211	023-01700-30	SPACER	-	1	17.5DX24DX1.0T	
212	023-01700-40	SPACER	-	1	17.5DX24DX1.2T	
310	243-22510-00	CONNECTING ROD AY	-	1		
320	243-23002-03	CONNECTING ROD BOLT	-	2	M7X1.25X14.6DX43L	
350	243-23301-13	PISTON PIN	-	1	18DX8DX54L	
360	256-23401-H3	PISTON	-	1	STD. (75DX68H)	
361	244-23402-13	PISTON	-	1	0.25 O.S. (75DX68H)	256-23402-H3
362	244-23403-13	PISTON	-	1	0.50 O.S. (75DX68H)	256-23403-H3
370	244-23501-27	PISTON RING SET	-	1	STD. (75D)	
371	244-23502-27	PISTON RING SET	-	1	0.25 O.S. (75D)	
372	244-23503-27	PISTON RING SET	-	1	0.50 O.S. (75D)	
380	056-52000-30	CLIP	-	2		
395	243-22801-03	LARGE END BEARING	-	2	STD.	
396	243-22802-03	LARGE END BEARING	-	2	0.25 U.S.	
397	243-22803-03	LARGE END BEARING	-	2	0.50 U.S.	

2015/11/02

3 INTAKE,EXHAUST

FIG. 301

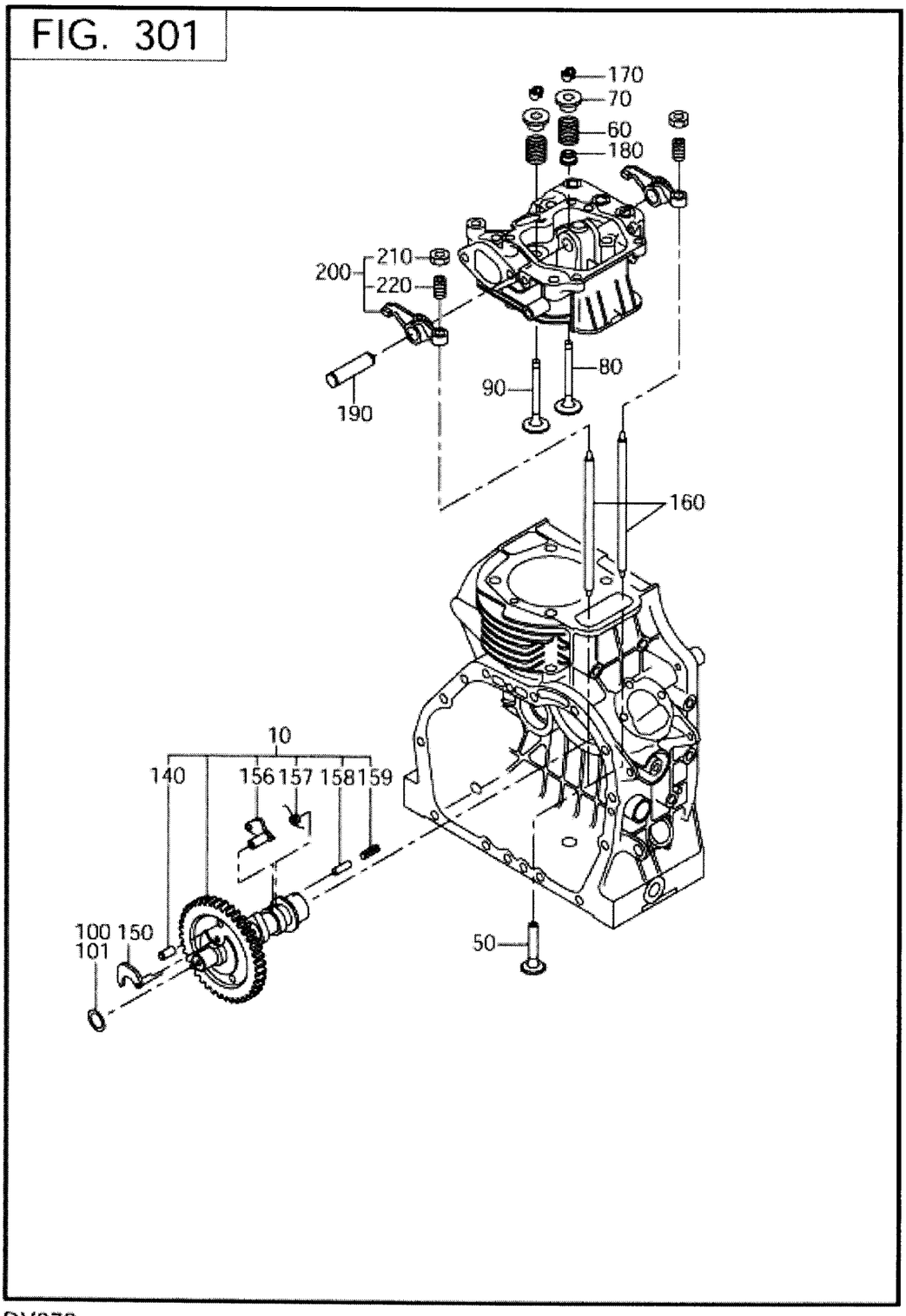

DY272DD7060 FIG.301

REF.	PART NUMBER	PART NAME	CODE NO.	QTY	REMARKS	INTERCHANGE
10	255-31703-21	CAMSHAFT CP	-	1		
50	243-33301-H3	TAPPET	-	2		
60	243-33601-03	VALVE SPRING	-	2		
70	243-33701-23	SPRING RETAINER	-	2		
80	243-33401-23	INTAKE VALVE	-	1		
90	243-33501-23	EXHAUST VALVE	-	1		
100	023-01900-20	SPACER	-	1	19DX28DX0.8T	
101	023-01900-30	SPACER	-	1	19DX28DX1.0T	
140	255-38001-03	DOWEL PIN	-	1		
150	243-35503-23	RELEASE LEVER	-	1		
156	243-35505-03	RELEASE LEVER	-	1		
157	243-35021-03	SPRING(RELEASE)	-	1		
158	243-35022-03	SHAFT(RELEASE)	-	1		
159	005-19031-20	SPRING PIN	-	1		
160	255-35005-01	PUSH ROD CP	-	2		
170	243-33801-13	RETAINER LOCK	-	4		
180	237-16008-01	STEM SEAL	-	1	5.5DX9.5DX14DX7.5B	277-16010-01
190	243-35034-03	ROCKER SHAFT	-	1	12DX54L	
200	243-36002-01	ROCKER ARM CP	-	2		
210	017-00800-90	NUT	-	2	M8X0.75X5.1H	
220	014-90800-21	ADJUSTING SCREW	-	2	M8X0.75X13.4L	

2015/11/02

3 INTAKE,EXHAUST GROUP

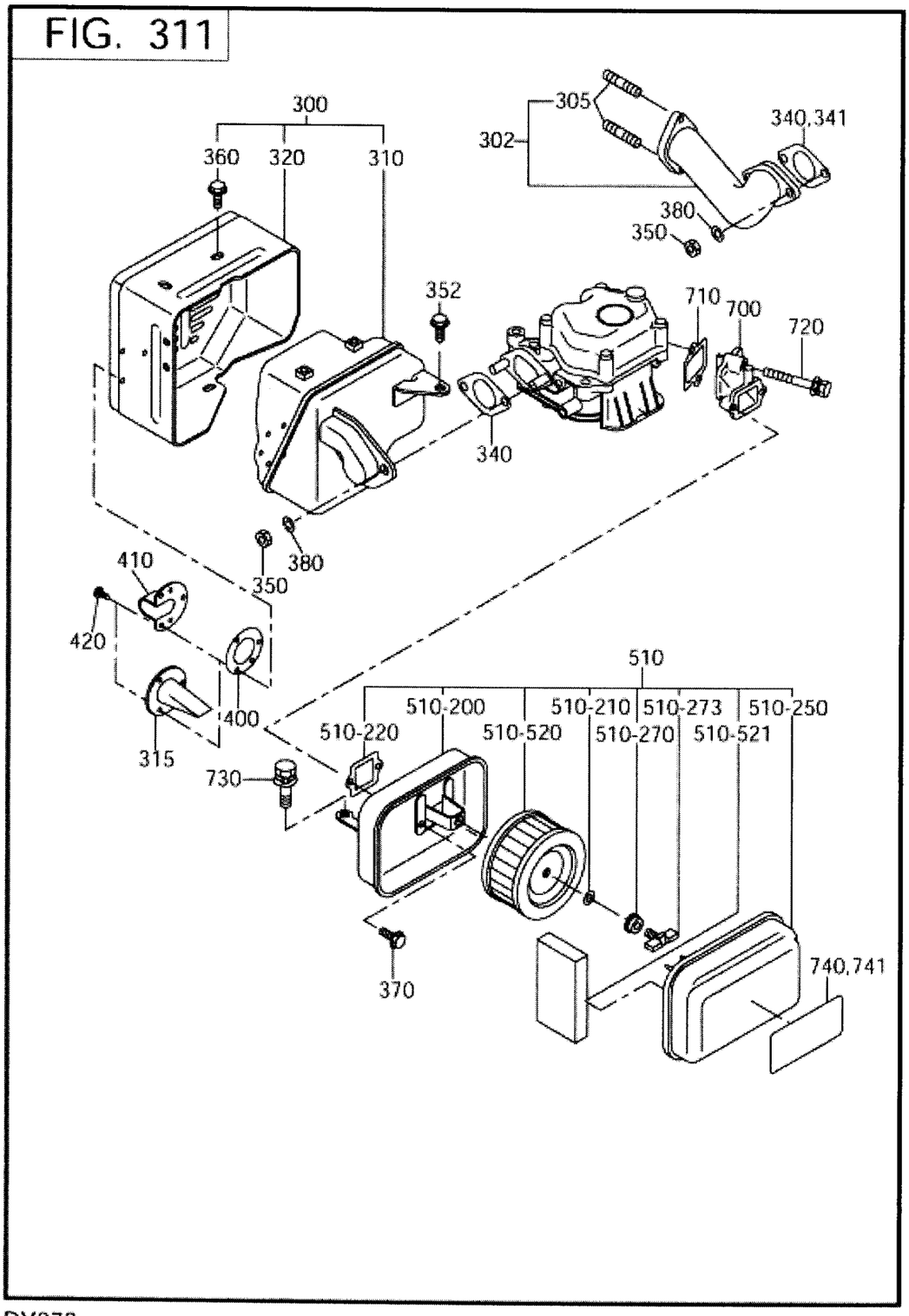

DY272DD7060 FIG.311

REF.	PART NUMBER	PART NAME	CODE NO.	QTY	REMARKS	INTERCHANGE
300	255-30103-10	MUFFLER AY	-	1		
340	255-35002-03	GASKET(EXHAUST)	-	1	T=1.2	
350	002-18080-00	NUT	-	2	M8X1.25X6.5H	
360	001-10061-00	BOLT AND WASHER AY	-	5	M6X1.0X10L W/SW	
370	001-13061-20	BOLT AND WASHER AY	-	2		001-14061-20
380	003-20080-00	SPRING WASHER	-	2	8.2DX15.4DX2T	
410	243-37002-11	TAIL PIPE CP	-	1		
420	015-00400-60	TAPPING SCREW	-	3	M4X6L	
510	243-32601-00	AIR CLEANER AY	-	1		
-200	243-32620-08	BACK PLATE CP	-	1		
-220	243-32651-08	PACKING	-	1		
-250	243-32640-08	COVER CP	-	1		
-273	246-32653-08	WING BOLT CP	-	1		
-520	243-32600-08	ELEMENT CP	-	1		
-521	243-32611-08	ELEMENT	-	1		
700	243-33101-13	INTAKE MANIFOLD	-	1		
710	243-35003-13	GASKET(IN-MANIFOLD)	-	1	T=0.3	
720	001-13083-50	BOLT AND WASHER AY	-	2	M8X1.25X35L W/SW	
730	001-13081-60	BOLT AND WASHER AY	-	1	M8X1.25X16L W/SW	

2015/11/02

4 GOVERNOR,OPERATE

FIG. 401

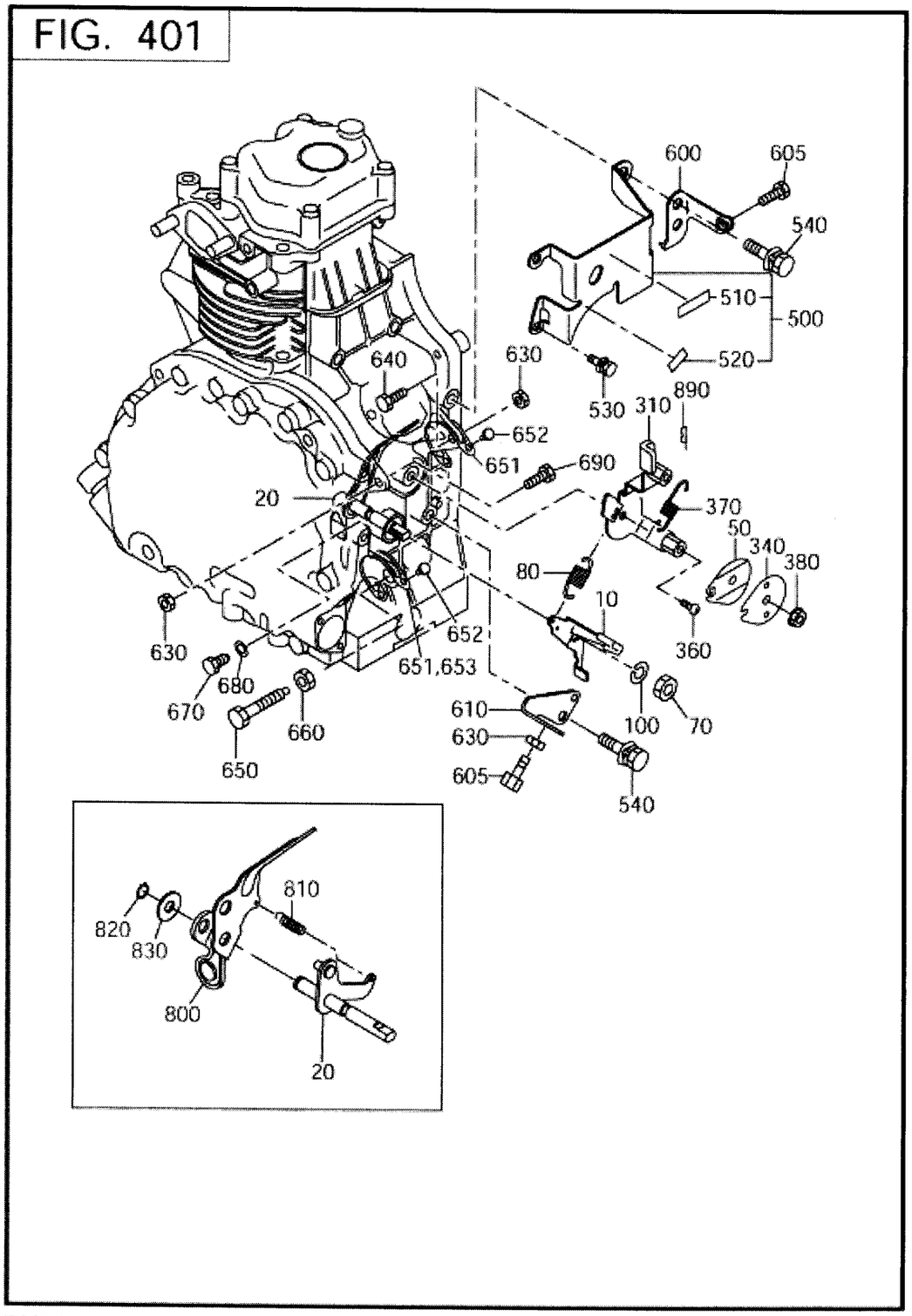

DY272DD7060 FIG.401

REF.	PART NUMBER	PART NAME	CODE NO.	QTY	REMARKS	INTERCHANGE
10	243-42902-21	CONTROL LINK CP	-	1		
20	243-42301-12	GOVERNOR LEVER UN	-	1		
50	227-45002-03	SPRING WASHER	-	1	T=0.4	
70	002-18080-00	NUT	-	1	M8X1.25X6.5H	
80	243-42503-13	GOVERNOR SPRING	-	1		
100	003-20080-00	SPRING WASHER	-	1	8.2DX15.4DX2T	
310	243-43301-30	SPEED CONTROL AY	-	1		
340	227-43501-13	STOP PLATE	-	1		
360	004-31041-00	SCREW,PANHEAD	-	2	M4X0.7X10L	
370	243-46001-03	RETURN SPRING	-	1		
380	017-60600-30	SELF LOCK NUT	-	1	M6X1.0X7.5H	
500	255-40166-01	CONTROL PANEL CP	-	1		
510	073-20045-60	LABEL(OPERATION)	-	1		
520	073-20045-50	LABEL(OPERATION)	-	1		
530	001-13061-20	BOLT AND WASHER AY	-	2		001-14061-20
540	001-13081-60	BOLT AND WASHER AY	-	3	M8X1.25X16L W/SW	
600	243-44202-01	WIRE BRACKET 1	-	1		
610	243-44210-01	WIRE BRACKET 2 CP	-	1		
630	002-18060-00	NUT	-	2		
640	001-66063-00	BOLT	-	1		
650	243-45501-10	SMOKE SET AY	-	1		243-45502-00
660	002-27100-00	NUT	-	1		
670	243-45002-03	BOLT	-	1		
680	003-10060-00	WASHER	-	1	6.5DX11.5DX0.8T	
690	010-00603-70	BOLT	-	1	M6X1.0X20L	

2015/11/02

5 COOLING,STARTING

FIG. 501

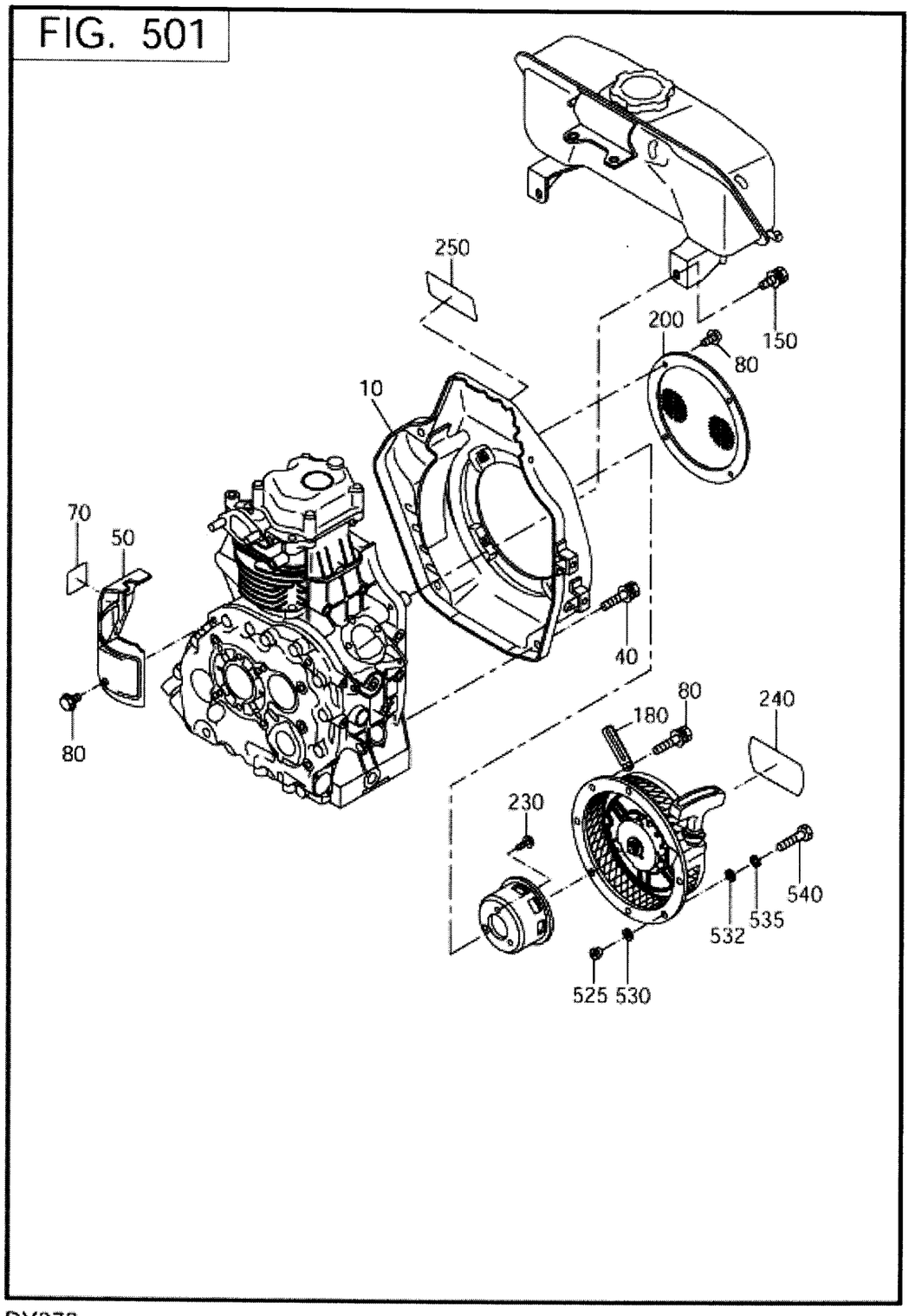

DY272DD7060 FIG.501

REF.	PART NUMBER	PART NAME	CODE NO.	QTY	REMARKS	INTERCHANGE
10	243-51201-31	BLOWER HOUSING CP	-	1		
40	001-13082-00	BOLT AND WASHER AY	-	2	M8X1.25X20L W/SW	
50	243-52601-33	CYLINDER BAFFLE	-	1		
70	256-91803-03	LABEL(ENGINE NAME)	-	1		
80	011-00600-10	FLANGE BOLT	-	5	M6X1.0X14DX8L	
150	001-13083-00	BOLT AND WASHER AY	-	2	M8X1.25X30L W/SW	
230	001-13061-20	BOLT AND WASHER AY	-	3		001-14061-20
240	243-95004-13	LABEL(DIESEL MARK)	-	1		

2015/11/02

6 COOLING,STARTING GRP

FIG. 551

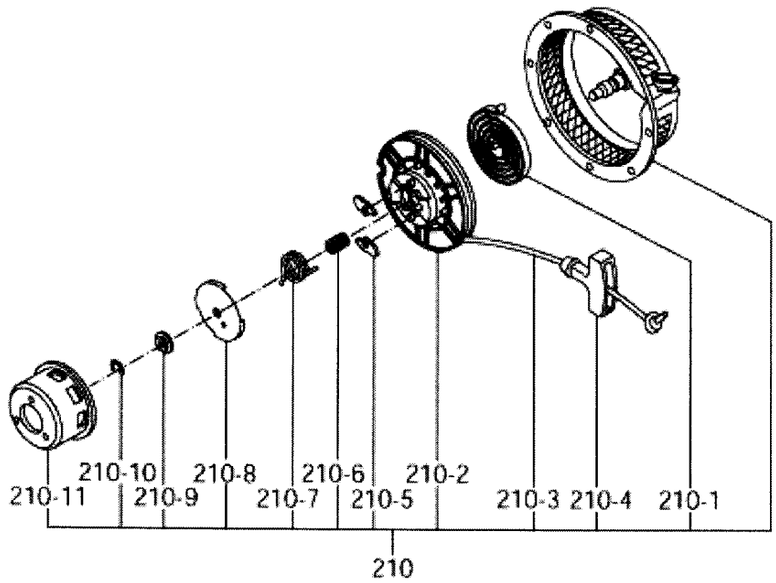

DY272DD7060 FIG.551

REF.	PART NUMBER	PART NAME	CODE NO.	QTY	REMARKS	INTERCHANGE
210	243-50201-30	RECOIL STARTER AY	-	1		
- 1	106-50116-08	SPIRAL SPRING	-	1		
- 2	239-50220-08	REEL CP	-	1		
- 3	243-50110-08	STARTER ROPE	-	1		
- 4	236-50101-18	STARTER KNOB	-	1		
- 5	106-50128-18	RATCHET	-	2		
- 6	106-50132-08	FRICTION SPRING	-	1		
- 7	106-50136-18	RETURN SPRING	-	1		
- 8	106-50144-18	FRICTION PLATE	-	1		
- 9	106-50185-18	THRUST WASHER	-	1		
- 10	106-50186-08	CLIP	-	1		
- 11	243-50145-08	STARTING PULLEY	-	1		

2015/11/02

6 FUEL,LUBLICANT

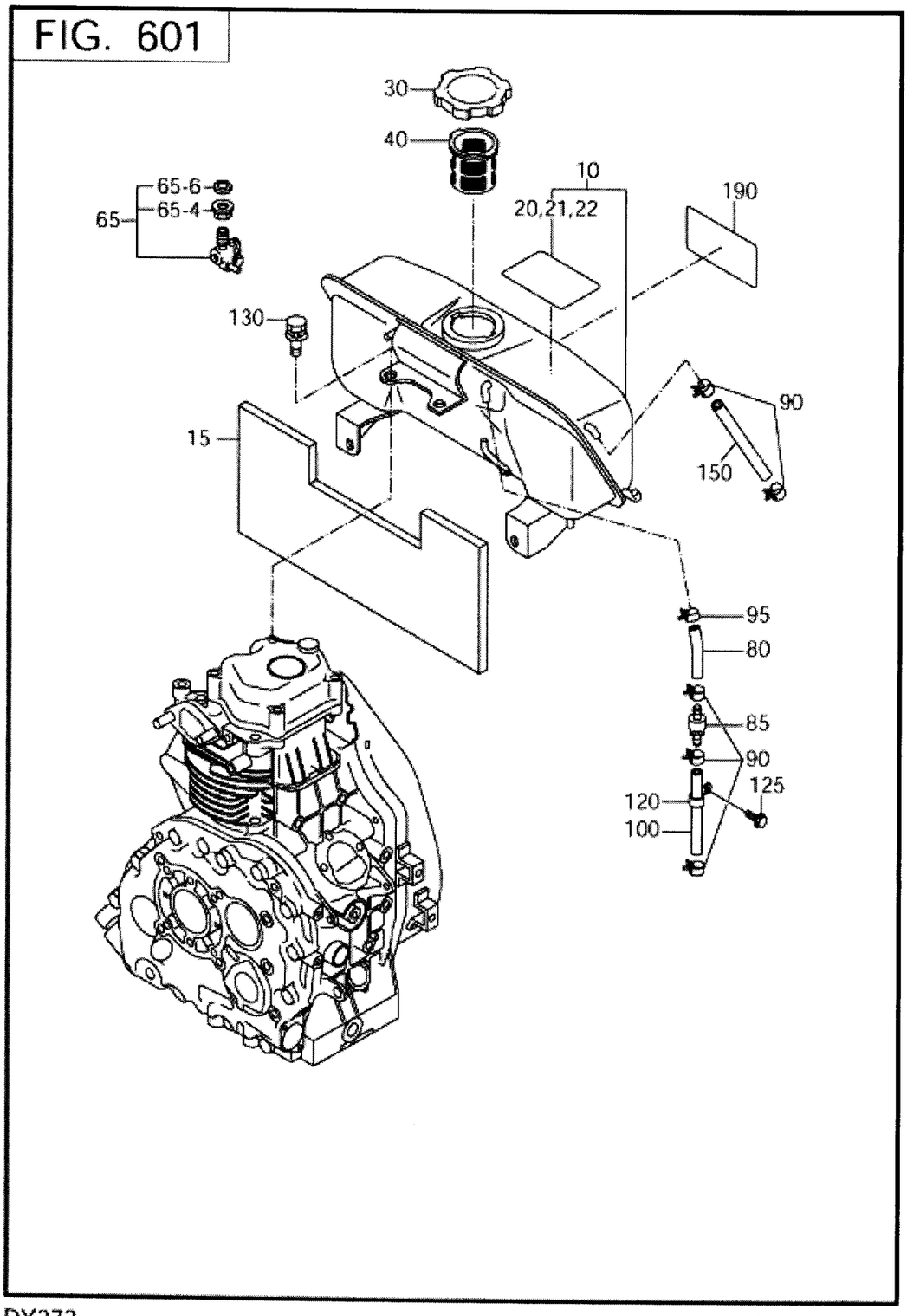

DY272DD7060 FIG.601

REF.	PART NUMBER	PART NAME	CODE NO.	QTY	REMARKS	INTERCHANGE
10	255-60101-01	FUEL TANK CP	-	1	3.2L RED	
20	073-20045-30	LABEL(WARNING)	-	1	95X70 ILLUST	
30	043-04400-50	FUEL TANK CAP CP	-	1	43DX68DX14H BLACK	
40	064-13600-10	FUEL FILTER	-	1	36DX46DX43H	X64-13600-10
80	085-10406-40	RUBBER PIPE	-	1	4.5DX9DX45L	085-14500-00
85	255-65006-03	CHECK VALVE	10379-	1		
	228-65032-13	CHECK VALVE	-10378	1		255-65006-03
90	056-10800-10	HOSE CLAMP	-	5	7.8DX6BX0.6T	
95	056-10800-20	HOSE CLAMP	-	1	8.5DX8BX0.7T	
100	085-10411-50	RUBBER PIPE	-	1	4.5DX9DX95L	085-14500-00
120	150-75201-03	CLAMP	-	1		
125	001-10061-00	BOLT AND WASHER AY	-	1	M6X1.0X10L W/SW	
130	001-13082-00	BOLT AND WASHER AY	-	2	M8X1.25X20L W/SW	
150	085-00500-00	VINYL PIPE	-	1	5DX8D	
190	244-91701-03	LABEL(TRADE MARK)	-	1		

2015/11/02

6 FUEL,LUBRICANT GROUP

FIG. 611

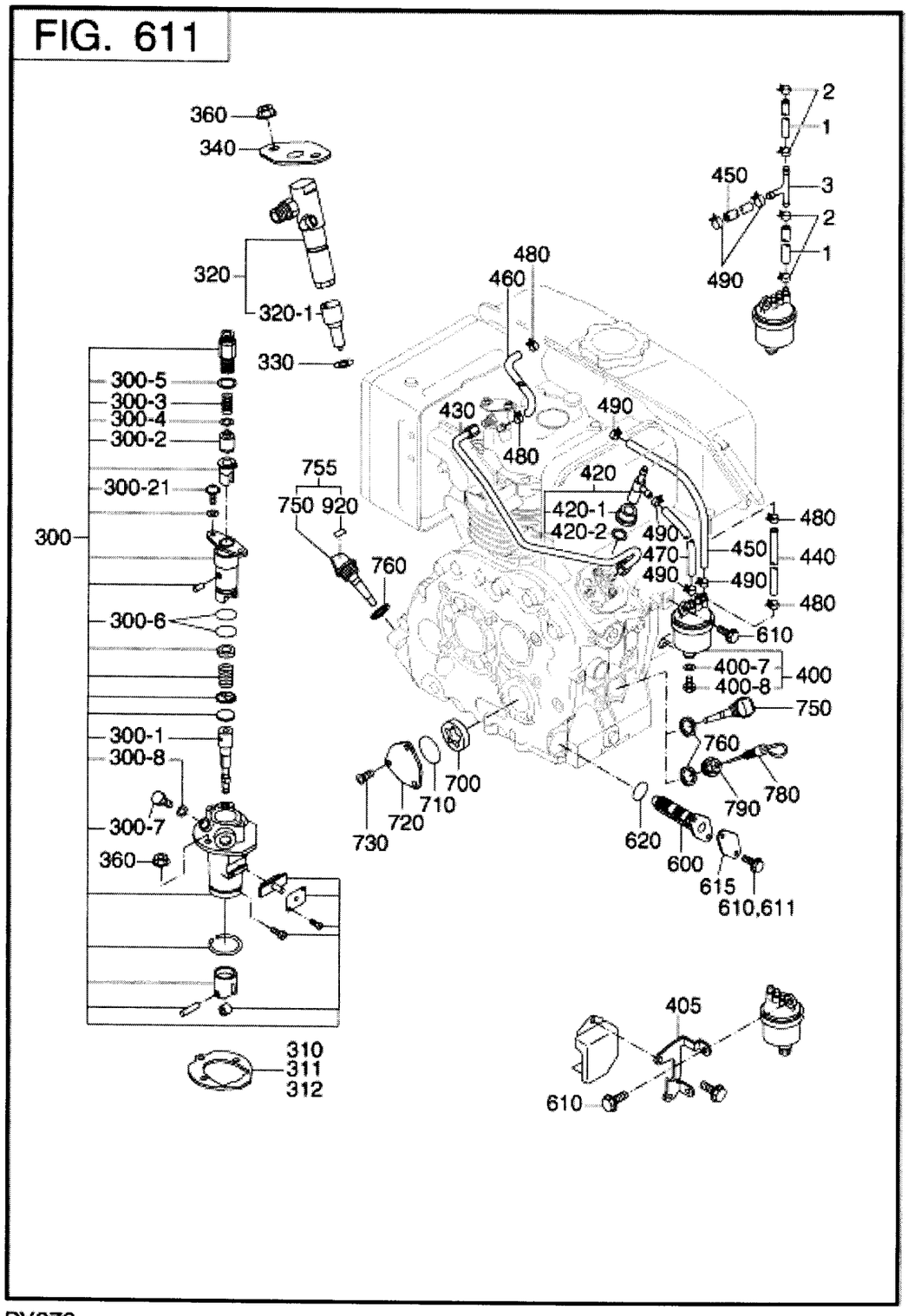

DY272DD7060 FIG.611

REF.	PART NUMBER	PART NAME	CODE NO.	QTY	REMARKS	INTERCHANGE
300	255-63103-10	INJECTION PUMP AY	-	1		
- 1	243-63131-08	PLUNGER AY	-	1		
- 2	243-63103-08	DELIVERY VALVE	-	1		
- 3	243-63104-08	DELIVERY SPRING	-	1		
- 4	243-63105-08	GASKET	-	1		
- 5	255-63109-08	O-RING	-	1		
- 6	255-63108-08	O-RING5	-	2		
- 21	243-63130-08	SCREW	-	2		
310	243-65001-03	GASKET(INJECTION)	-	1	T=0.1	
311	243-65002-03	GASKET(INJECTION)	-	1	T=0.2	
312	243-65003-03	GASKET(INJECTION)	-	1	T=0.3	
320	243-63201-00	NOZZLE AY	-	1		
- 1	243-63204-08	NOZZLE	-	1		
330	228-65004-03	GASKET(NOZZLE)	-	1	7.5DX16DX1.5T	
340	243-66001-01	BRACKET CP,NOZZLE 1	-	1		
360	002-38060-00	FLANGE NUT	-	4	M6X1.0X13DX6H	
400	243-62101-20	FUEL FILTER AY	-	1		
- 7	228-62112-08	PACKING	-	1		
- 8	228-62111-08	PLUG	-	1		
420	243-66520-10	T-CONNECTOR AY	-	1		
- 1	243-66521-08	NUT	-	1		
- 2	243-66506-08	PACKING	-	1		
430	243-63301-21	INJECTION PIPE CP	-	1		
440	085-10408-30	RUBBER PIPE	-	1	4.5DX9DX90L	085-14500-00
450	085-10603-50	RUBBER PIPE	-	1	6DX12DX180L	085-10600-00
460	085-10414-20	RUBBER PIPE	-	1	4.5DX9DX135L	085-14500-00
470	085-10607-40	RUBBER PIPE	-	1	6DX12DX120L	085-10600-00
480	056-10800-10	HOSE CLAMP	-	4	7.8DX6BX0.6T	
490	056-11100-20	HOSE CLAMP	-	4	11.5DX8BX0.7T	
600	255-64301-00	OIL FILTER AY	-	1		

DY272DD7060 FIG.611

REF.	PART NUMBER	PART NAME	CODE NO.	QTY	REMARKS	INTERCHANGE
610	001-14061-60	BOLT AND WASHER AY	-	2	M6X1.0X16L W/W.SW	
611	001-14061-60	BOLT AND WASHER AY	-	2	M6X1.0X16L W/W.SW	
620	006-26201-60	O RING	-	1		
700	228-63902-03	OIL PUMP(OUTER)	-	1		
710	024-03300-60	O RING	-	1	33.2DX37D	
720	255-66020-13	COVER(OIL PUMP)	-	1		
730	014-00601-70	SCREW	-	3	M6X1.0X13L	
750	214-63601-13	OIL GAUGE	-	2	M22X1.5 L=86+25	
755	255-63604-01	OIL GAUGE CP	-	2		
760	021-32000-50	GASKET	-	2	20DX27DX1.5T RUBBER	
920	073-20061-30	LABEL(OIL)	10014-	2		
	X73-20057-10	LABEL(OIL)	-10013	2		

2015/11/02

7 ELECTRIC DEVICE

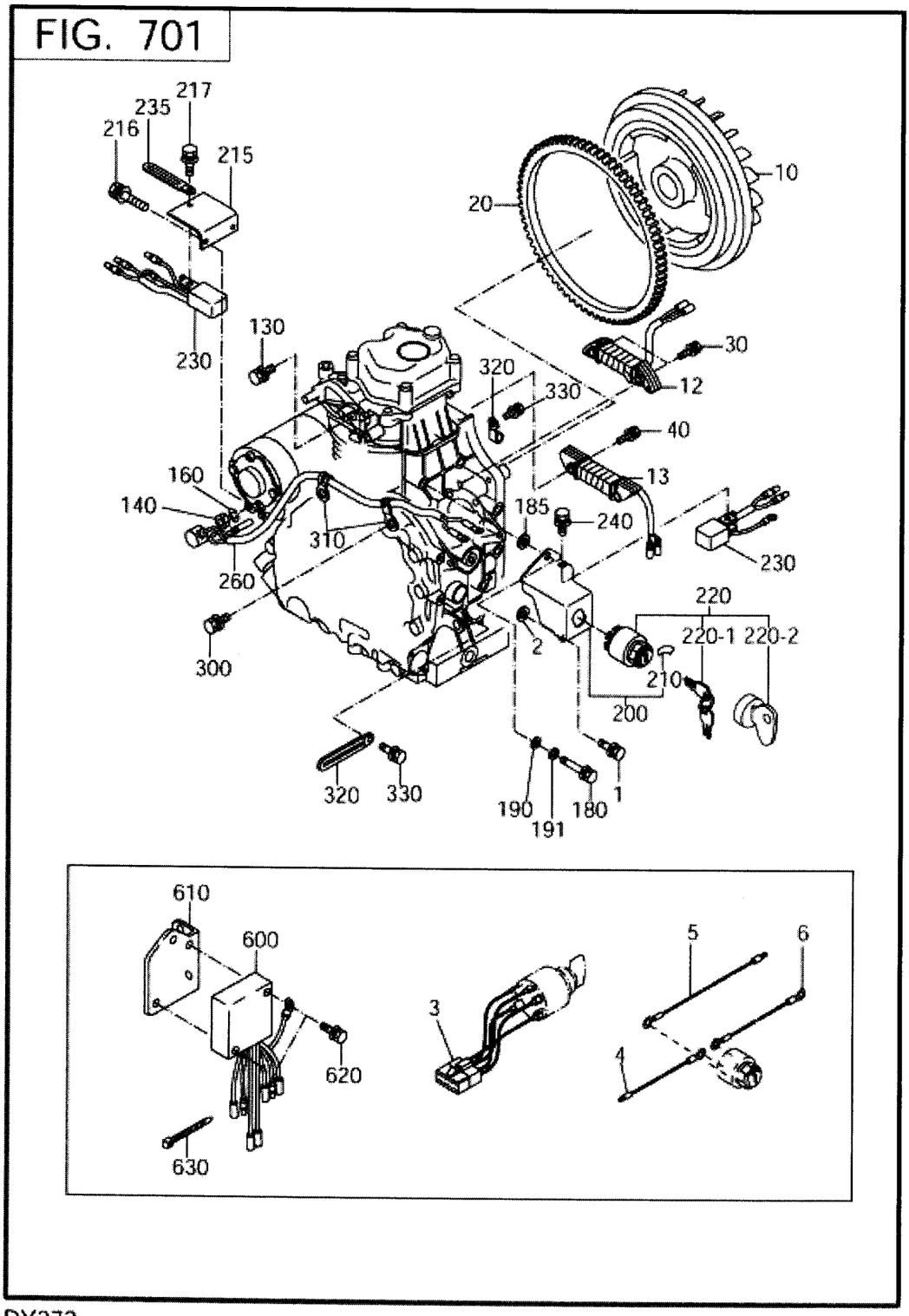

DY272DD7060 FIG.701

REF.	PART NUMBER	PART NAME	CODE NO.	QTY	REMARKS	INTERCHANGE
10	243-70110-51	FLYWHEEL CP	10287-	1		
	243-70110-41	FLYWHEEL CP	-10286	1		243-70110-51
12	243-70102-21	CHARGE COIL CP	-	1		
30	004-35062-50	SCREW AND WASHER AY	-	2	M6X1.0X25L W/SW	
230	243-71401-01	DIODE RECTIFER CP	-	1		
320	226-75101-03	CLAMP	-	1	6.5DX10BX55LX0.7T	
330	004-35061-00	SCREW AND WASHER AY	-	1	M6X1.0X10L W/SW	

2015/11/02

9 ACCESORIES,LABEL

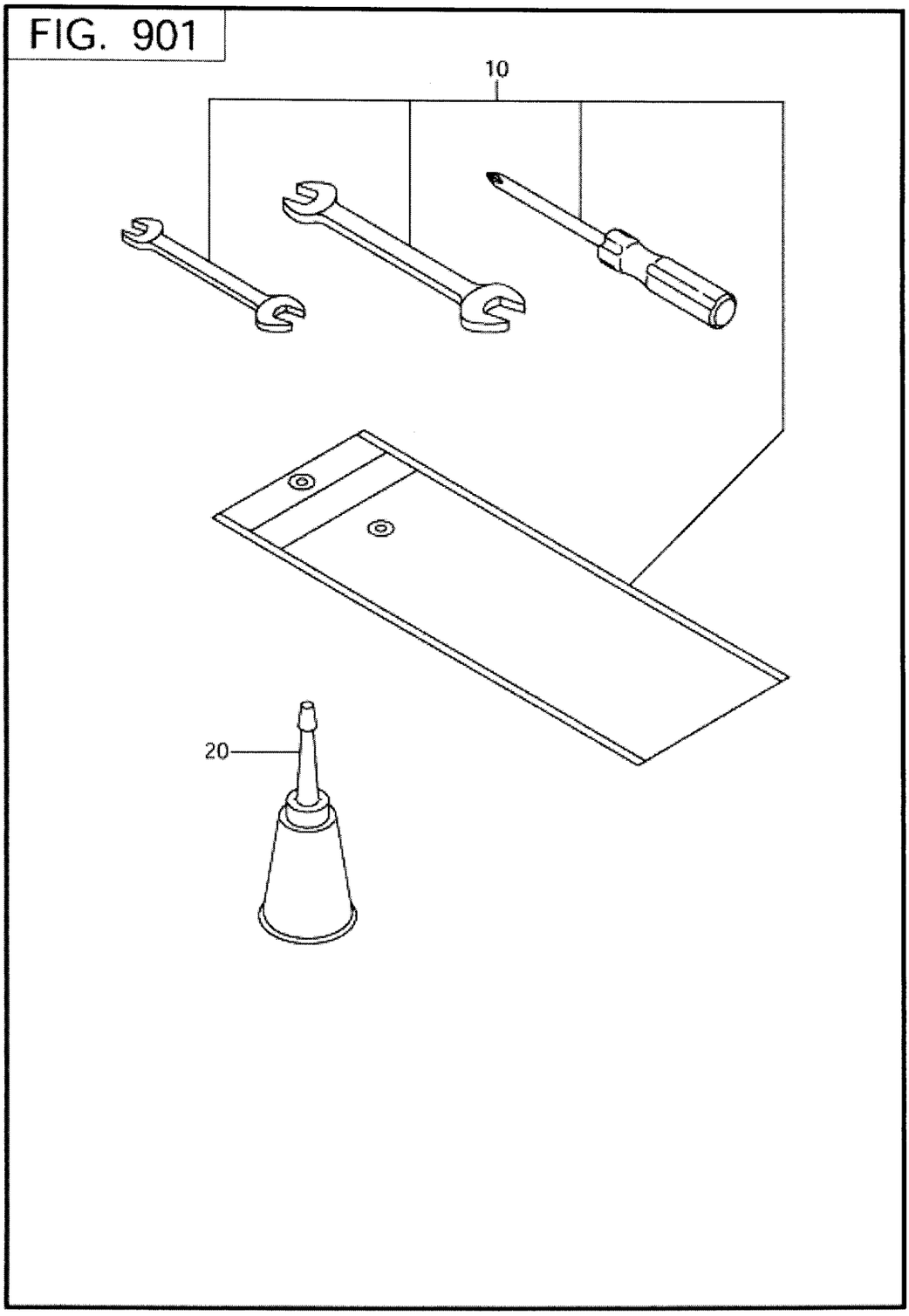

DY272DD7060 FIG.901

REF.	PART NUMBER	PART NAME	CODE NO.	QTY	REMARKS	INTERCHANGE
10	243-90301-00	ACCESSORY TOOLS KIT	-	1		
20	243-65006-00	OIL FEEDER AY	-	1		